SUPERWAVE LASERSYSTEM
思博威激光

SW-SW Series Laser Spot Welder



Superwave Laser Technology Co.,Ltd

Address: Liangtang Industrial park, #48 Kangzheng Road,
Nanwan Street, Buji Town Shenzhen

Tel.:+86-755-8243 5125

Fax. +86-755-8240 4717

Mobile P: +86-139 2523 7065

Email:info@superwavelaser.com

Web.www.superwave-laser.com

Jewelry Laser soldering

Lasers can weld all precious metals and their alloys without any filler or soldering material. Robust, invisible repairs of high quality can be achieved within a short time: cleaning porous surfaces of platinum and gold cast parts, repair of claws, or processing of ring sizes. The laser optimizes the production process and opens up possibilities for completely new designs. The comparatively narrow processing window for highly reflective materials such as silver and gold, requires a perfect and consistent beam quality in order to keep the weld quality constant.

Fine welding with Laser Spot Welder

The laser is an excellent tool for seam, butt and overlap welding of almost all common metals and their alloys. The wide range of tried and tested applications includes stainless steel, gold, silver, platinum and titanium, as well as shape memory alloys. Amongst these are some materials which are difficult, if not impossible, to join with conventional techniques.
The Laser spot welder give extraordinary quality of laser welded joints from a machine that is quick and easy to use. Within a few minutes spot and seam welds can be realized with an accuracy in the micron range – even in complicated areas. The rule of thumb is: if you can see the joint, it can be laser welded. With
a laser, experienced users can join filigree work-pieces with a fineness and precision which no other method can even remotely achieve.

Perfect results by excellent performance

By matching the parameters and shape of the laser pulses to each material, the laser generates a minimal heat affected zone, thus meeting the precondition for welding temperature-sensitive components.Another positive effect of the low
thermal load of the two parts is, that unwanted modifications of the joint by the welding process can almost always be avoided. Laser welded joints are of high strength and resist even high mechanical strain without any wear. Other than adhesive seals, they are temperature-resistant and show pore-free surfaces. Compared to other joining techniques, post processing of laser weld is reduced to only a few simple steps,
or can be ignored completely.

Benefits

- Simple workpiece handling

Easy handling and fast operational readiness with extremely short training periods

- Multifunctional

Spot, seam, overlap and deposit welding

- High flexibility

Perfect welds – even in complicated areas

- Many different materials

Such as stainless steel, gold, silver, platinum, titanium, shape memory alloys

- Precision

Spot-accurate positioning and visual control via stereo microscope

- Minimal heat input

No distortion, no damage to temperature-sensitive components

■Micro welding

Weld seams smaller than 50 microns with high pulse-to-pulse stabilit

■Filigree and robust

Welds of 50 micron to 2 mm seam depth

■High-strength joints

Robust joints for high-strain work-pieces

■Flawless surfaces

Pore-free, oxidation-free, no burn-off

■Time and cost-efficient

No set-up times, short welding periods, minimal or no post-processing

SW-SW200

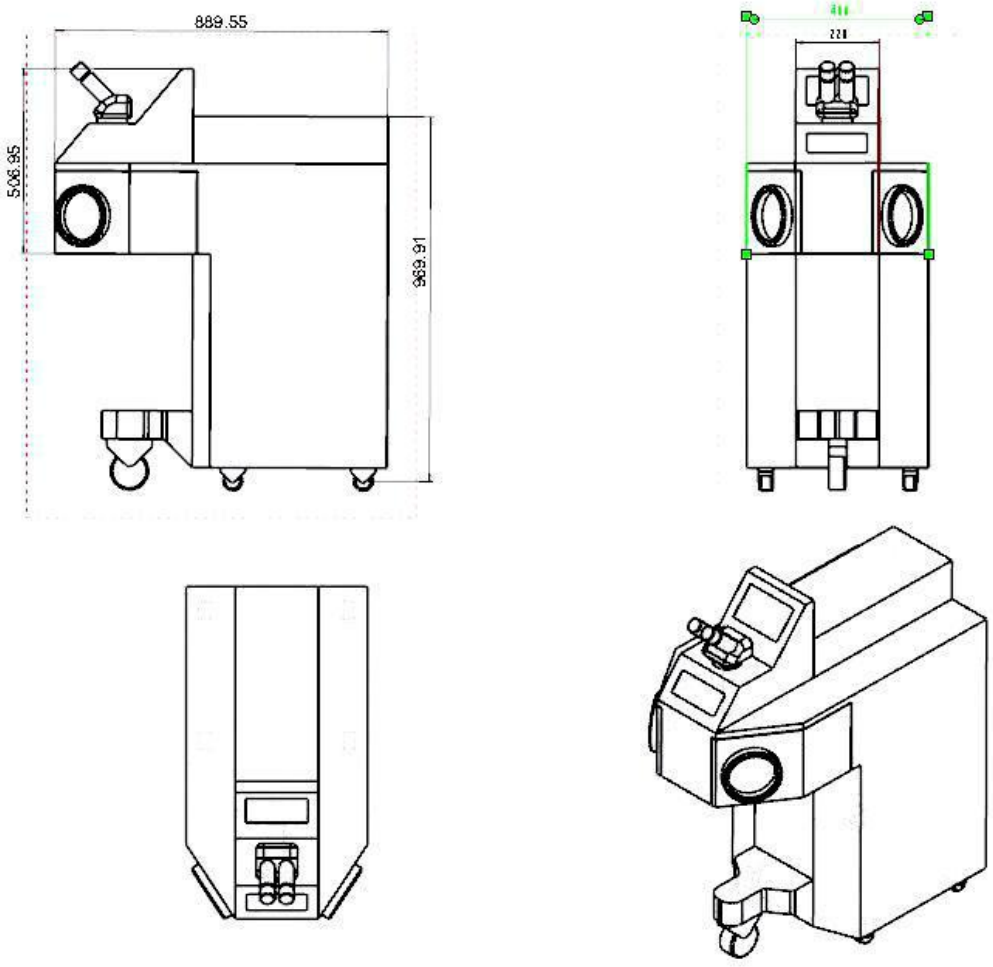

Specifications

Laser parameters	
Laser type	Nd:YAG Solid State Laser
Laser pump source	Flash lamp
Laser wavelength	1064nm
Nominal power	200W
Pulse peak power	8KW
Pulse energy	120J
Pulse duration	0.1-20ms
Pulse frequency	1-50Hz(other is optional)
Laser spot size	0.1-2.0mm
Mains	
Electrical	220V / 110V (Optional)
Frequency	50Hz / 60Hz
Rated Power	6KVA,Single Phase ,25Amp
Standby	1.5KVA.
Measures	
Dimensions	L x W x H :880mm x 480mm x 1100mm
Net Weight	135kg
Gross Weight	220kg
Laser Cooling-with refrigeration compressor	
Setting temperature	25℃
Temperature difference set	2℃
Running temperature range	23-27℃
Low temperature warning	5℃
Max temperature warning	45℃
Water level warning	has
Water flow warning	has
Laser Cooling-with air cooling heat exchanger	
Setting temperature	30℃
Cooling fan running temperature	33℃
Running temperature range	30-45℃
Low temperature warning	5℃
Max temperature warning	50℃
Water level warning	has
Water flow warning	has
Environment temperature warning	has

The advantage of SuperWave laser spot welder:

1.the first manufacturer in shenzhen to design a desktop spot welder with built-in water cooling, **10 years of technica**l deposition and experience of it.

2.**Quality assurance**,and we do all testing, such like pulse to pulse stability, energy testing,laser power testing ,free sample test etc.

3.the startup time is only **20 seconds**.

4.Using microcomputer-based LED touch screen to do human-computer interaction, intuitive interface,can **set 50 sets of parameters**,easy to operate.

5.touch screen outside and joystick in working chamber **both can** set parameters.

6.Use the most **advanced light shielding system** to eliminate the irritation to eyes by light during working

7.Built-in air cooling, **low power consumption**.

8.**1 year** free **warranty** period , Professional technical answer for you，provide English instructions and installation of video.

9.Free **sample testing** can be provided.